CHERRYMAX® RIVET

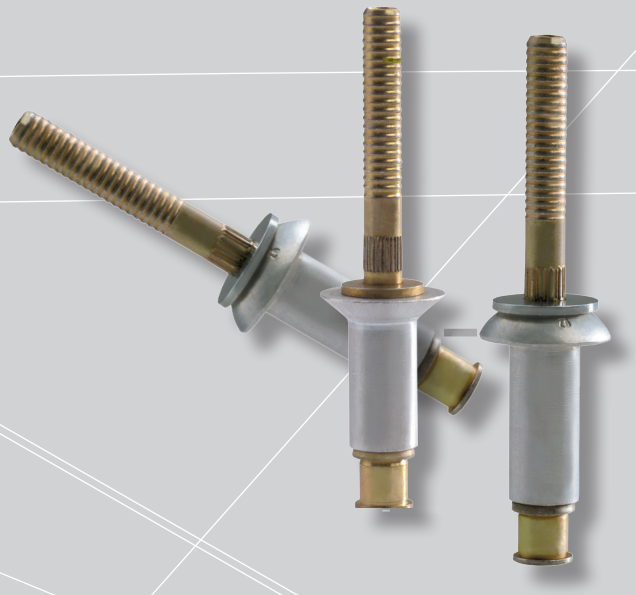

CHERRY®
AEROSPACE
SPS Fastener Division, a PCC Company

INDEX

CherryMAX® Rivet Features and Benefits 3–4

CherryMAX® Rivet Selection
Numbering System / Head Styles 5
Diameter/grip System 6
Mechanical Properties / Gages 7
Weight Per 1000 Pieces by Rivet Size 8

CherryMAX® Rivet Standards Pages
Nominal Shank
Universal Head 9
100° Flush Head 10
100° Flush Shear Head (NAS 1097) 11
Oversize Shank Diameter
Universal Head 12
100° Flush Head 13
Unisink Head 14
120° Flush Head 15

CherryMAX® Rivet Installation & Inspection 16-18

CherryMAX® Rivet Installation Tooling
Tool Selection 19–27

LIMITED WARRANTY

Seller warrants the goods conform to applicable specifications and drawings and will be manufactured and inspected according to generally accepted practices of companies manufacturing industrial or aerospace fasteners. In the event of any breach of the foregoing warranty, Buyer's sole remedy shall be to return defective goods (after receiving authorization from Seller) for replacement or refund of the purchase price, at the Seller's option. Seller agrees to any freight costs in connection with the return of any defective goods, but any costs relating to removal of the defective or nonconforming goods or installation of replacement goods shall be Buyer's responsibility. SELLER'S WARRANTY DOES NOT APPLY WHEN ANY PHYSICAL OR CHEMICAL CHANGE IN THE FORM OF THE PRODUCT IS MADE BY BUYER. THE FOREGOING EXPRESS WARRANTY AND REMEDY ARE EXCLUSIVE AND ARE IN LIEU OF ALL OTHER WARRANTIES AND REMEDIES; ANY IMPLIED WARRANTY AS TO QUALITY, FITNESS FOR PURPOSE, OR MERCHANTABILITY IS HEREBY SPECIFICALLY DISCLAIMED AND EXCLUDED BY SELLER. This warranty is void if seller is not notified in writing of any rejection of the goods within one (1) Year aFter initial use by buyer of any power Riveter or ninety (90) days after initial use of any other product.

Seller shall not be liable under any circumstances for incidental, special or consequential damages arising in whole or in part from any breach by Seller, AND SUCH INCIDENTAL, SPECIAL, OR CONSEQUENTIAL DAMAGES ARE HEREBY EXPRESSLY EXCLUDED.

Our policy is one of continuous development. Specifications shown in this document may be subject to changes introduced after publication.

CHERRY®, CHERRYMAX® and MAXIBOLT® are trademarks of Cherry Aerospace.

NOTE

The properties, strengths, dimensions, installed characteristics and all other information in this catalog is for guidance only to aid in the correct selection of the products described herein and is not intended or implied as part of the warranty. All applications should be evaluated for functional suitability and available samples of the described parts can be requested for installed tests, suitability and evaluations.

ATTENTION:

Important: Blind fasteners are not always interchangeable with non-blind fasteners. Consult with the aircraft original equipment manufacturer for proper application of this product.

CHERRYMAX® RIVET

FEATURES

The CherryMAX® Rivet is the most reliable, high strength structural fastener with visual inspectability in the world today. It features the "Safe-lock" Locking Collar for more reliable joint integrity. Meets requirements of PS-CMR-3000.

CherryMAX® Rivets consist of four components assembled as a single unit:

1. A fully serrated stem with break notch, shear-ring and integral grip adjustment cone.
2. A driving anvil to insure a visible mechanical lock with each fastener installation.
3. A separate, visible and inspectable locking collar that mechanically locks the stem to the rivet sleeve.
4. A rivet sleeve with recess in the head to receive the locking collar

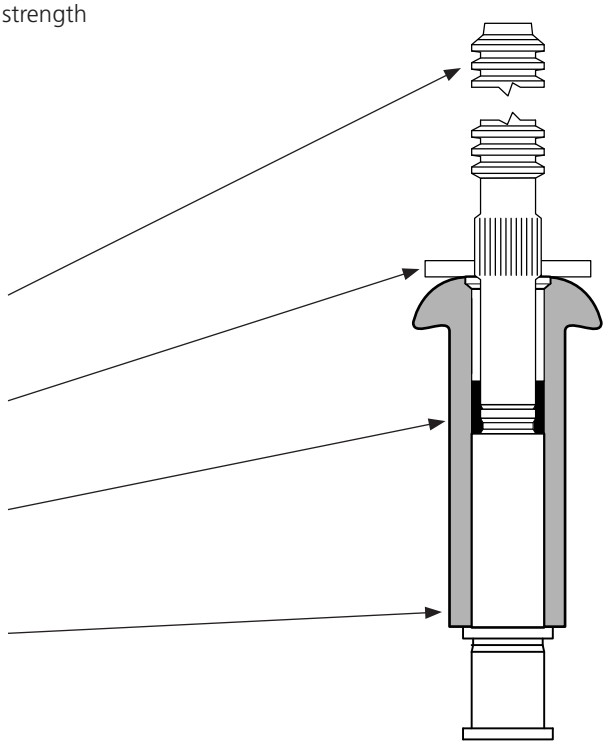

INSTALLATION

1 The CherryMAX® Rivet is inserted into the prepared hole. The pulling head (installation tool) is slipped over the rivet's stem. Applying a firm, steady pressure, which seats the rivet head, the installation tool is then actuated.

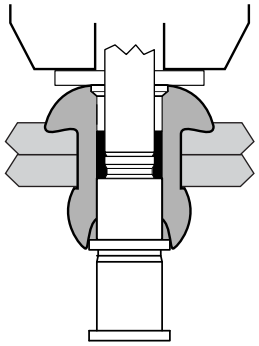

2 The pulling head holds the rivet sleeve in place as it begins to pull the rivet stem into the rivet sleeve. This pulling action causes the stem shear ring to upset the rivet sleeve and form the "bulbed" blind head. Formation of the rivet sleeve's "bulbed" blind head is complete.

3 The continued pulling action of the installation tool causes the stem shear ring to shear from the main body of the stem as the stem continues to move thru the rivet sleeve. This action allows the fastener to accommodate a minimum of 1/16" variation in structure thickness. The Locking Collar then contacts the Driving Anvil. As the stem continues to be pulled by the action of the installation tool, the "Safe-lock" Locking Collar deforms into the rivet sleeve head recess.

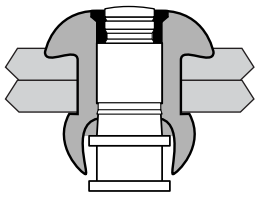

4 The "Safe-lock" Locking Collar fills the rivet sleeve head recess, locking the stem and rivet sleeve securely together. Continued pulling by the installation tool causes the stem to fracture at the break notch, providing a flush, burr-free, inspectable installation.

CHERRYMAX® RIVET

BENEFITS

DRIVING ANVIL

A driving anvil is part of each CherryMAX® Rivet assembly. This Driving Anvil eliminates wear and replacement of expendable installation tool components, considerably extending the life of the installation tool.

It also allows one pulling head to install:

- 1/8", 5/32", and 3/16" Nominal and Oversize Diameter Rivets.
- Protruding, 100° Flush and 100° Flush Shear, Unisink, and 120° Flush Head Styles
- All CherryMAX® Rivet grip lengths
- All CherryMAX® Rivet sleeve/stem material combinations

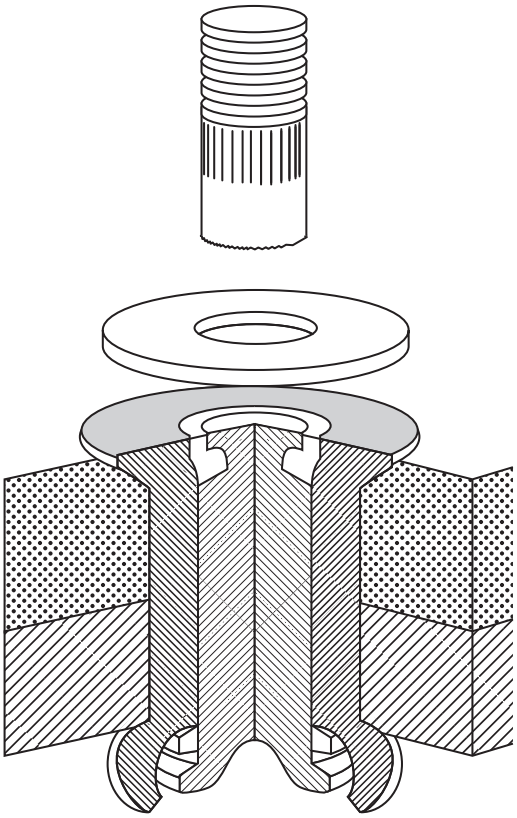

LOCKING COLLAR

The CherryMAX® Rivet features the patented "Safe-Lock" Locking Collar which enhances joint integrity and reliability.

The "Safe-lock" Locking Collar is preformed on the stem during a sub-assembly operation, then deforms into the rivet sleeve head recess during installation, locking the rivet sleeve and stem together.

The "Safe-lock" Locking Collar is visible and inspectable after installation.

The "Safe-lock" Locking Collar installs flush with the rivet sleeve head.

The "Safe-lock" Locking Collar has been approved by several OEM's for use in engine inlets and components.

RIVET

The CherryMAX® Rivet is available in both nominal and 1/64" oversize shank diameters and is available in four material combinations:

- 5056 Aluminum Sleeve/Alloy Steel Stem (50KSI Shear)
- 5056 Aluminum Sleeve/Cres Stem (50KSI Shear)
- Monel Sleeve/Cres Stem (75KSI Shear)
- INCO 600 Sleeve/INCO X-750 Stem (75KSI Shear)

TOOLING SIMPLICITY

Lightweight, non-shifting installation tools require no adjusting.

Limited access capability with Right Angle and Offset Pulling Heads and Extensions for greater reach and "Split" tools for special applications including automation and robotics.

BULBED BLIND HEAD

Provides a large bearing surface area on the blind side of the structure, giving dependable results, even when installed in difficult thin sheet stack-up applications.

CHERRYMAX® RIVET SELECTION

NUMBERING SYSTEM

Cherry Part Number Example:

CR3 24 2 -6 -04

Maximum Grip Length in 16ths of an inch (-04 = 4/16 = 1/4)

Rivet Diameter in 32nds of an inch (-6 = 6/32 = 3/16)

Head Style
Odd number = Protruding Head
Even number = Flush Head

Rivet Type & Material Combination
(See Pages 8 thru 14)

CherryMAX Rivet

HEAD STYLES

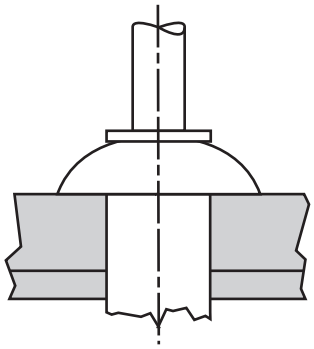

UNIVERSAL
(MS20470)
For protruding head applications
Available in both
nominal & oversize

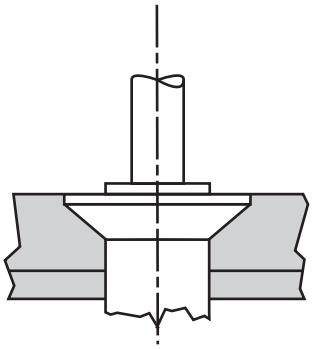

100° FLUSH
(MS20426)
For countersunk applications
Available in both
nominal & oversize

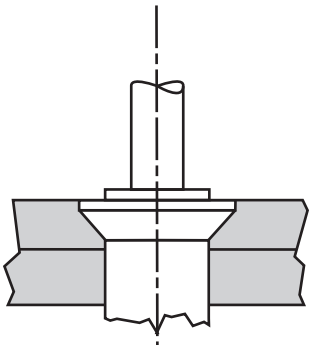

100° FLUSH
(NAS1097)
For thin top sheet, machine
countersunk applications
Available in nominal only

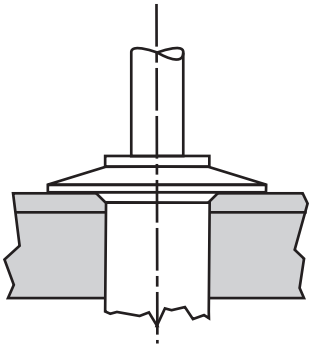

UNISINK
A combination flush and protruding
head for use in very thin top sheets.
Eliminates need for double-dimpling.
Available in oversize only

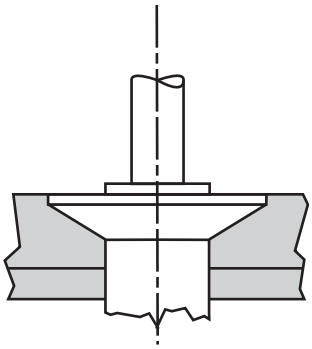

120° FLUSH
A large diameter, shallow flush head
providing a wide bearing area in thin
top sheet applications.
Available in oversize only

CHERRYMAX® RIVET SELECTION

MECHANICAL PROPERTIES*

Materials			
Sleeve	Stem	Ultimate Shear Strength	MaximumTemperature
5056 ALUMINUM	ALLOY STEEL	50,000 PSI	250° F
5056 ALUMINUM	CRES	50,000 PSI	250° F
MONEL	CRES	75,000 PSI	900° F
INCO 600	INCO X-750	75,000 PSI	1400° F

* At room temperature

Rivet Diameter	Sheet Thickness	Single Shear					Tensile						
		Aluminum		Monel		INCO	Aluminum			Monel			INCO
		NOM.	O/S	NOM.	O/S	O/S	Nom.		O/S	Nom.		O/S	O/S
		3212 3213 3214 3222 3223 3224	3242 3243 3245 3246 3252 3253 3255	3522 3523 3524	3552 3553 3555 3556	3852 3853	3212 3213 3222 3223	3214 3224	3242 3243 3245 3246 3252 3253 3255	3522 3523	3524	3552 3553 3555 3556	3852 3853
1/8 (-4)	2X.156	664	814	995	1220	1220	285	250	345	400	360	490	570
5/32 (-5)	2X.187	1030	1245	1545	1865	1865	445	390	530	635	555	740	860
3/16 (-6)	2X.219	1480	1685	2215	2525	2525	635	560	710	890	800	1000	1160
1/4 (-8)	2X.281	2615	2925	3920	4390	4390	1125	1000	1260	1570	1410	1755	2030

GAGES

269C3 GRIP GAGE

National Stock Number 5210-00-255-7544

A simple, self-explanatory gage for determining material thickness and proper river grip length.

T172 Rivet Hole Size Gage

These are precision ground, go/no-go gages used to check holes drilled for CherryMAX® rivets. They are made in both nominal and oversize rivet diameters.

Rivet Diameter	Gage Number	National Stock No.	Rivet Diameter	Gage Number	National Stock No.
1/8" NOMINAL	T172-4	5220-00-478-4135	1/8" OVERSIZE	T172-400	5220-00-478-4127
5/32" NOMINAL	T172-5	5220-01-021-3276	5/32" OVERSIZE	T172-500	5220-00-478-4140
3/16" NOMINAL	T172-6	5220-00-478-4136	3/16" OVERSIZE	T172-600	5220-00-478-4141
1/4" NOMINAL	T172-8	5220-00-478-4139	1/4" OVERSIZE	T172-800	5220-01-374-1340

CHERRYMAX® RIVET

UNIVERSAL HEAD / NOMINAL DIAMETER

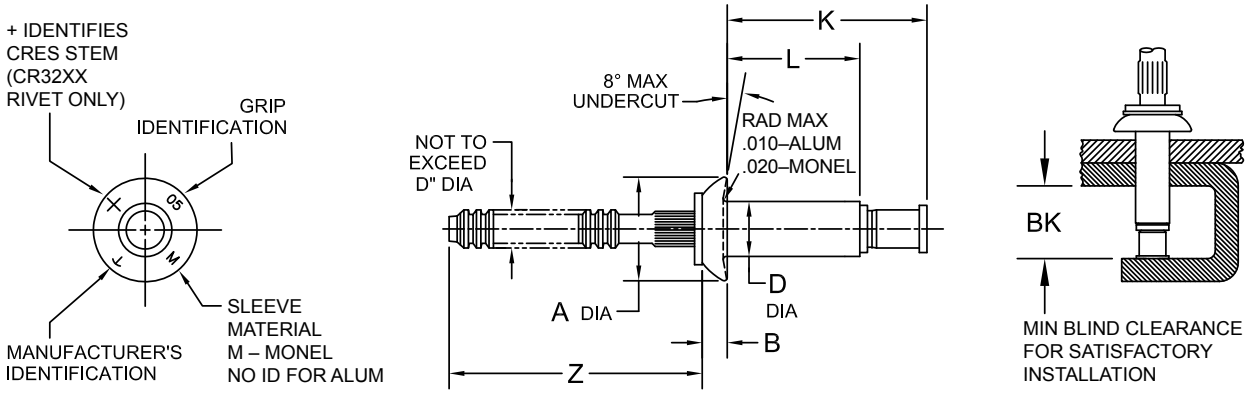

Dia. Dash No.	D +.003 -.001	A ±.010	B +.010 -.000	BK min	Z (ref)	Hole Limits
-4	.126	.250	.054	.355	.87	.129-.132
-5	.157	.312	.067	.370	.94	.160-.164
-6	.189	.375	.080	.415	.94	.192-.196
-8	.253	.500	.107	.485	.97	.256-.261

Grip Limits 1/16		-4(1/8") Diameter			-5(5/32") Diameter			-6(3/16") Diameter			-8(1/4") Diameter		
Min.	Max.	Dash no.	+.000 L -.030	K max	Dash No.	+.000 L -.030	K max	Dash No.	+.000 L -.030	K max	Dash No.	+.000 L -.030	K max
①	.062	4-01	.161	.38	5-01	.187	.41	6-01	.219	.47	—	—	—
.063	.125	4-02	.224	.45	5-02	.230	.47	6-02	.262	.51	8-02	.315	.59
.126	.187	4-03	.287	.51	5-03	.293	.53	6-03	.325	.57	8-03	.378	.65
.188	.250	4-04	.349	.57	5-04	.355	.59	6-04	.387	.64	8-04	.440	.72
.251	.312	4-05	.412	.63	5-05	.418	.65	6-05	.450	.70	8-05	.503	.78
.313	.375	4-06	.474	.70	5-06	.480	.72	6-06	.512	.76	8-06	.565	.84
.376	.437	4-07	.537	.76	5-07	.543	.77	6-07	.575	.82	8-07	.628	.90
.438	.500	4-08	.599	.82	5-08	.605	.84	6-08	.637	.88	8-08	.690	.97
.501	.562	4-09	.662	.88	5-09	.668	.90	6-09	.700	.95	8-09	.753	1.03
.563	.625	—	—	—	5-10	.730	.96	6-10	.762	1.01	8-10	.815	1.09
.626	.687	—	—	—	5-11	.793	1.02	6-11	.825	1.07	8-11	.878	1.15
.688	.750	—	—	—	—	—	—	6-12	.887	1.13	8-12	.940	1.22
.751	.812	—	—	—	—	—	—	6-13	.950	1.19	8-13	1.003	1.28
.813	.875	—	—	—	—	—	—	—	—	—	8-14	1.065	1.34

Rivet Number	Material ③			Finish		
	Sleeve	Stem	Lock Collar	Sleeve	Stem	Lock Collar
CR3213	5056 ALUM. ALLOY QQ-A-430	8740 ALLOY STEEL AMS 6322	A-286 CRES AMS 5731	CHEM FILM MIL-DTL-5541 PLAIN COLOR	CAD PLATE QQ-P-416 TYPE II CL. 2	PASSIVATE AMS 2700
CR3223	5056 ALUM. ALLOY QQ-A-430	15-7 PH CRES AMS 5657	A-286 CRES AMS 5731	CHEM FILM MIL-DTL-5541 PLAIN COLOR	CAD PLATE QQ-P-416, TYPE I CL. 2 OR PASSIVATE AMS 2700	
CR3523	MONEL QQ-N-281	15-7 PH CRES AMS 5657	A-286 CRES AMS 5731	NONE	NONE	
CR3523P	MONEL QQ-N-281	15-7 PH CRES AMS 5657	A-286 CRES AMS 5731	ALUM. COAT MIL-DTL-83488	NONE	
CR3523EE	MONEL QQ-N-281	15-7 PH CRES AMS 5657	A-286 CRES AMS 5731	ALUM. COAT NAS4006	NONE	

NOTES: ① Minimum grip for: -4 dia. = .025
Minimum grip for: -5 dia. = .031
Minimum grip for: -6 dia. = .037

2. Do not clean or degrease prior to installation — lubricant must not be removed.
③ Chemical composition only.
④ Gold colored driving anvil identifies nominal rivets.

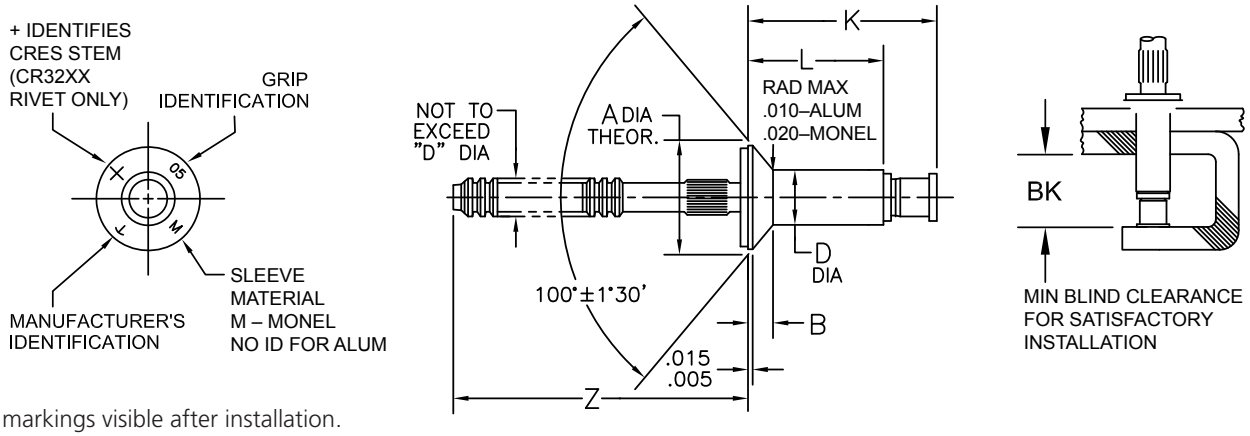

Head markings visible after installation.

Dia. Dash No.	D +.003 -.001	A ① ±.004	B (ref)	BK min	Z (ref)	C Aluminum	C Monel	Hole Limits
-4	.126	.225	.041	.355	.87	.002-.010	.005-.015	.129-.132
-5	.157	.286	.054	.370	.94	.002-.012	.005-.015	.160-.164
-6	.189	.353	.069	.415	.94	.002-.012	.005-.015	.192-.196
-8	.253	.476	.095	.485	.97	.002-.016	.005-.015	.256-.261

Grip Limits 1/16		-4(1/8") Diameter			-5(5/32") Diameter			-6(3/16") Diameter			-8(1/4") Diameter		
min.	Max.	Dash No.	+.000 L -.030	K max	Dash No.	+.000 L -.030	K max	Dash No.	+.000 L -.030	K max	Dash No.	+.000 L -.030	K max
②	.125	4-02	.224	.45	5-02	.230	.47	6-02	.262	.51			
.126	.187	4-03	.287	.51	5-03	.293	.53	6-03	.325	.57	8-03	.378	.65
.188	.250	4-04	.349	.57	5-04	.355	.59	6-04	.387	.64	8-04	.440	.72
.251	.312	4-05	.412	.63	5-05	.418	.65	6-05	.450	.70	8-05	.503	.78
.313	.375	4-06	.474	.70	5-06	.480	.72	6-06	.512	.76	8-06	.565	.84
.376	.437	4-07	.537	.76	5-07	.543	.77	6-07	.575	.82	8-07	.628	.90
.438	.500	4-08	.599	.82	5-08	.605	.84	6-08	.637	.88	8-08	.690	.97
.501	.562	4-09	.662	.88	5-09	.668	.90	6-09	.700	.95	8-09	.753	1.03
.563	.625	—	—	—	5-10	.730	.96	6-10	.762	1.01	8-10	.815	1.09
.626	.687	—	—	—	5-11	.793	1.02	6-11	.825	1.07	8-11	.878	1.15
.688	.750	—	—	—	—	—	—	6-12	.887	1.13	8-12	.940	1.22
.751	.812	—	—	—	—	—	—	6-13	.950	1.19	8-13	1.003	1.28
.813	.875	—	—	—	—	—	—	—	—	—	8-14	1.065	1.34

RIVET NUMBER	MATERIAL ④ SLEEVE	MATERIAL ④ STEM	MATERIAL ④ LOCK COLLAR	FINISH SLEEVE	FINISH STEM	FINISH LOCK COLLAR
CR3212	5056 ALUM. ALLOY QQ-A-430	8740 ALLOY STEEL AMS 6322	A-286 CRES AMS 5731	CHEM FILM MIL-DTL-5541 PLAIN COLOR	CAD PLATE QQ-P-416 TYPE II CL. 2	PASSIVATE AMS 2700
CR3222	5056 ALUM. ALLOY QQ-A-430	15-7 PH CRES AMS 5657	A-286 CRES AMS 5731	CHEM FILM MIL-DTL-5541 PLAIN COLOR	CAD PLATE QQ-P-416, TYPE I CL. 2 OR PASSIVATE AMS 2700	
CR3522	MONEL QQ-N-281	15-7 PH CRES AMS 5657	A-286 CRES AMS 5731	NONE	NONE	
CR3522P	MONEL QQ-N-281	15-7 PH CRES AMS 5657	A-286 CRES AMS 5731	ALUM. COAT MIL-DTL-83488	NONE	
CR3522EE	MONEL QQ-N-281	15-7 PH CRES AMS 5657	A-286 CRES AMS 5731	ALUM. COAT NAS4006	NONE	

NOTES: ① Head diameters are to theoretical projection.
② Minimum grip for: -4 dia. = .063
Minimum grip for: -5 dia. = .065
Minimum grip for: -6 dia. = .080
3. Do not clean or degrease prior to installation — lubricant must not be removed.
④ Chemical composition only.
⑤ Gold colored driving anvil identifies nominal rivets.

CHERRYMAX® RIVET

NAS 1097 100° FLUSH SHEAR HEAD / NOMINAL DIAMETER

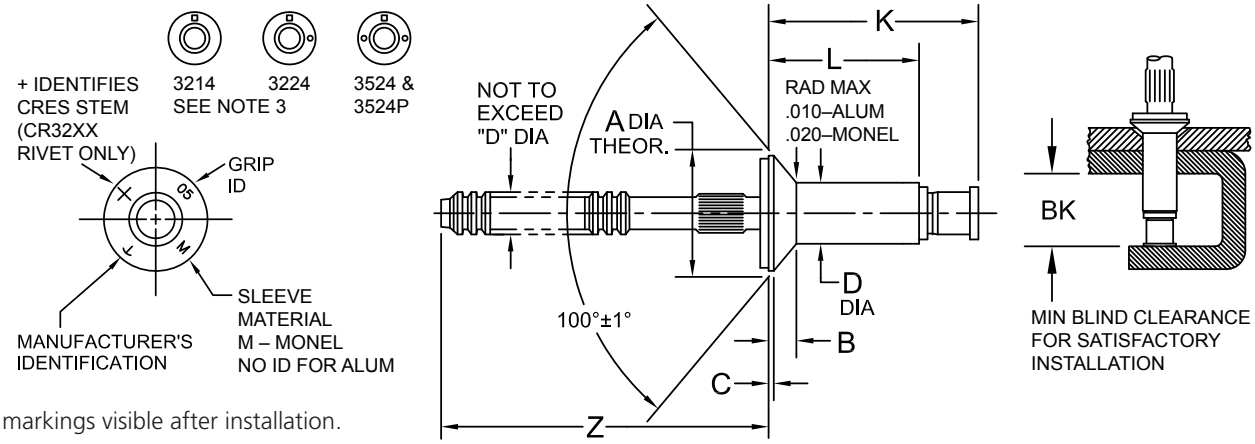

Head markings visible after installation.

Dia. Dash No.	D +.003 -.001	A ① ±.004	B (ref)	BK min	Z (ref)	C Aluminum	C Monel	Hole Limits
-4	.126	.192	.028	.355	.87	.002-.010	.005-.015	.129-.132
-5	.157	.243	.037	.370	.94	.002-.012	.005-.015	.160-.164
-6	.189	.299	.046	.415	.94	.002-.012	.005-.015	.192-.196
-8	.253	.392	.060	.485	.97	.002-.016	.005-.015	.256-.261

Grip Limits 1/16		-4(1/8") Diameter			-5(5/32") Diameter			-6(3/16") Diameter			-8(1/4") Diameter		
min.	Max.	Dash No.	+.000 L -.030	K max	Dash No.	+.000 L -.030	K max	Dash No.	+.000 L -.030	K max	Dash No.	+.000 L -.030	K max
.045	.062	4-01	.221	.45	—	—	—	—	—	—	—	—	—
②	.125	4-02	.224	.45	5-02	.230	.47	6-02	.262	.51	—	—	—
.126	.187	4-03	.287	.51	5-03	.293	.53	6-03	.325	.57	8-03	.378	.65
.188	.250	4-04	.349	.57	5-04	.355	.59	6-04	.387	.64	8-04	.440	.72
.251	.312	4-05	.412	.63	5-05	.418	.65	6-05	.450	.70	8-05	.503	.78
.313	.375	4-06	.474	.70	5-06	.480	.72	6-06	.512	.76	8-06	.565	.84
.376	.437	4-07	.537	**.76**	5-07	.543	.77	6-07	.575	.82	8-07	.628	.90
.438	.500	4-08	.599	.82	5-08	.605	.84	6-08	.637	.88	8-08	.690	.97
.501	.562	4-09	.662	.88	5-09	.668	.90	6-09	.700	.95	8-09	.753	1.03
.563	.625	—	—	—	5-10	.730	.96	6-10	.762	1.01	8-10	.815	1.09
.626	.687	—	—	—	5-11	.793	1.02	6-11	.825	1.07	8-11	.878	1.15
.688	.750	—	—	—	—	—	—	6-12	.887	1.13	8-12	.940	1.22
.751	.812	—	—	—	—	—	—	—	—	—	8-13	1.003	1.28
.813	.875	—	—	—	—	—	—	—	—	—	8-14	1.065	1.34

Rivet Number	Material ⑤ Sleeve	Material ⑤ Stem	Material ⑤ Lock Collar	Finish Sleeve	Finish Stem	Finish Lock Collar
CR3214	5056 ALUM. ALLOY QQ-A-430	8740 ALLOY STEEL AMS 6322	A-286 CRES AMS 5731	CHEM FILM MIL-DTL-5541 PLAIN COLOR	CAD PLATE QQ-P-416 TYPE II CL. 2	PASSIVATE AMS 2700
CR3224	5056 ALUM. ALLOY QQ-A-430	15-7 PH CRES AMS 5657	A-286 CRES AMS 5731	CHEM FILM MIL-DTL-5541 PLAIN COLOR	CAD PLATE QQ-P-416, TYPE I CL. 2 OR PASSIVATE AMS 2700	
CR3524	MONEL QQ-N-281	15-7 PH CRES AMS 5657	A-286 CRES AMS 5731	NONE	NONE	
CR3524P	MONEL QQ-N-281	15-7 PH CRES AMS 5657	A-286 CRES AMS 5731	ALUM. COAT MIL-DTL-83488	NONE	
CR3524EE	MONEL QQ-N-281	15-7 PH CRES AMS 5657	A-286 CRES AMS 5731	ALUM. COAT NAS4006	NONE	

NOTES: ① Head diameters are to theoretical projection.
② Minimum grip for: -4 dia. = .063
Minimum grip for: -5 dia. = .065
Minimum grip for: -6 dia. = .080
③ -6 and -8 diameter marking only; square depressed marking with dots identifies CherryMAX -4 and -5 diameters.
4. Do not clean or degrease prior to installation — lubricant must not be removed.
⑤ Chemical composition only.
⑥ Gold colored driving anvil identifies nominal rivets.

CHERRYMAX® RIVET

UNIVERSAL HEAD / OVERSIZE DIAMETER

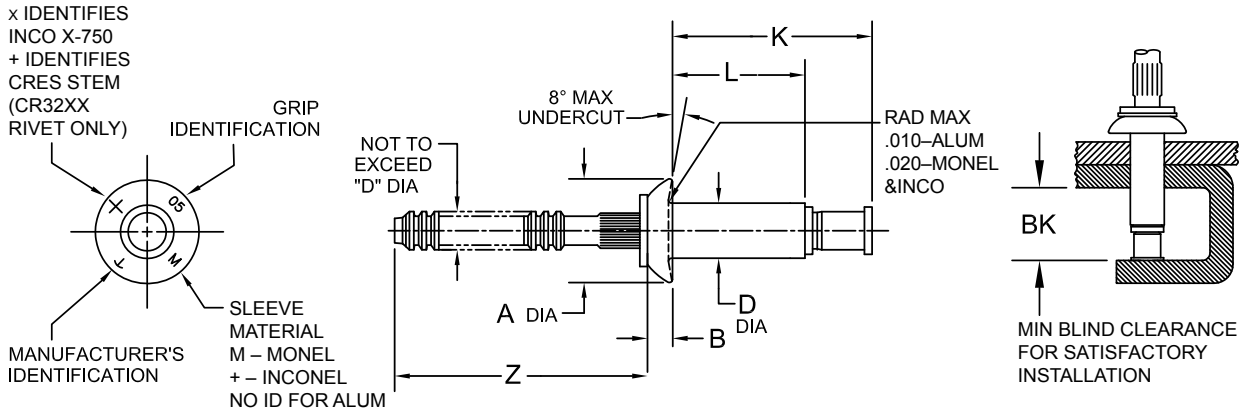

Dia. Dash No.	D +.003 -.001	A ±.010	B +.010 -.000	BK min	Z (ref)	Hole Limits
-4	.140	.250	.054	.390	.87	.143-.146
-5	.173	.312	.067	.395	.94	.176-.180
-6	.201	.375	.080	.410	.94	.205-.209
-8	.267	.500	.107	.490	.96	.271-.275

Grip Limits 1/16		-4(1/8") Diameter			-5(5/32") Diameter			-6(3/16") Diameter			-8(1/4") Diameter		
min.	Max.	Dash No.	+.000 L -.030	K max	Dash No.	+.000 L -.030	K max	Dash No.	+.000 L -.030	K max	Dash No.	+.000 L -.030	K max
①	.062	4-01	.175	.39	5-01	.203	.43	6-01	.242	.45			
.063	.125	4-02	.238	.46	5-02	.246	.47	6-02	.265	.50	8-02	.313	.57
.126	.187	4-03	.301	.52	5-03	.309	.53	6-03	.328	.55	8-03	.375	.64
.188	.250	4-04	.363	.58	5-04	.371	.60	6-04	.390	.62	8-04	.437	.70
.251	.312	4-05	.426	.65	5-05	.434	.66	6-05	.453	.68	8-05	.500	.77
.313	.375	4-06	.488	.71	5-06	.496	.72	6-06	.515	.74	8-06	.562	.83
.376	.437	4-07	.551	.78	5-07	.559	.79	6-07	.578	.82	8-07	.625	.89
.438	.500	4-08	.613	.84	5-08	.621	.85	6-08	.640	.89	8-08	.687	.95
.501	.562	4-09	.676	.90	5-09	.684	.91	6-09	.703	.95	8-09	.750	1.02
.563	.625	—	—	—	5-10	.746	.98	6-10	.765	1.01	8-10	.812	1.08
.626	.687	—	—	—	5-11	.809	1.04	6-11	.828	1.07	8-11	.875	1.14
.688	.750	—	—	—	—	—	—	6-12	.890	1.14	8-12	.937	1.20
.751	.812	—	—	—	—	—	—	6-13	.953	1.20	8-13	1.000	1.27
.813	.875	—	—	—	—	—	—	—	—	—	8-14	1.062	1.60

Rivet Number	Material ③			Finish		
	Sleeve	Stem	Lock Collar	Sleeve	Stem	Lock Collar
CR3243	5056 ALUM. ALLOY QQ-A-430	8740 ALLOY STEEL AMS 6322	A-286 CRES AMS 5731	CHEM FILM MIL-DTL-5541 PLAIN COLOR	CAD PLATE QQ-P-416 TYPE II CL. 2	PASSIVATE AMS 2700
CR3253	5056 ALUM. ALLOY QQ-A-430	15-7 PH CRES AMS 5657	A-286 CRES AMS 5731	CHEM FILM MIL-DTL-5541 PLAIN COLOR	CAD PLATE QQ-P-416, TYPE I CL. 2 OR PASSIVATE AMS 2700	
CR3553	MONEL QQ-N-281	15-7 PH CRES AMS 5657	A-286 CRES AMS 5731	NONE	NONE	
CR3553P	MONEL QQ-N-281	15-7 PH CRES AMS 5657	A-286 CRES AMS 5731	ALUM. COAT MIL-DTL-83488	NONE	
CR3553EE	MONEL QQ-N-281	15-7 PH CRES AMS 5657	A-286 CRES AMS 5731	ALUM. COAT NAS4006 & BMS10-85	NONE	
CR3853	INCO 600 AMS 5687	INCO X-750 AMS 5698	A-286 CRES AMS 5731	NONE	NONE	

NOTES: ① Minimum grip for: -4 dia. = .025
Minimum grip for: -5 dia. = .031
Minimum grip for: -6 dia. = .037

2. Do not clean or degrease prior to installation — lubricant must not be removed.

③ Chemical composition only.

④ Silver colored driving anvil identifies oversize rivets.avt

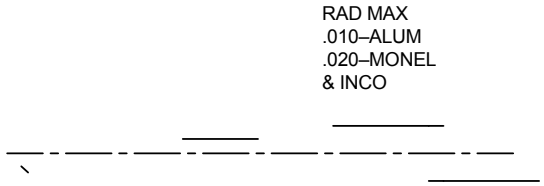
RAD MAX
.010–ALUM
.020–MONEL
& INCO

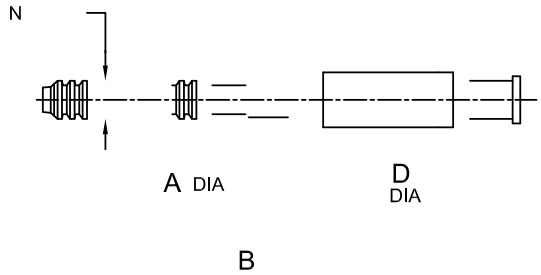
N
A DIA
D
DIA
B

CHERRYMAX® RIVET

120° FLUSH HEAD / OVERSIZE DIAMETER

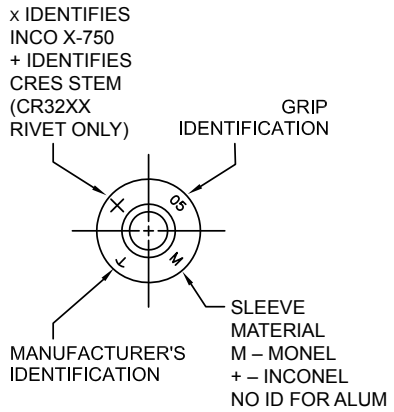

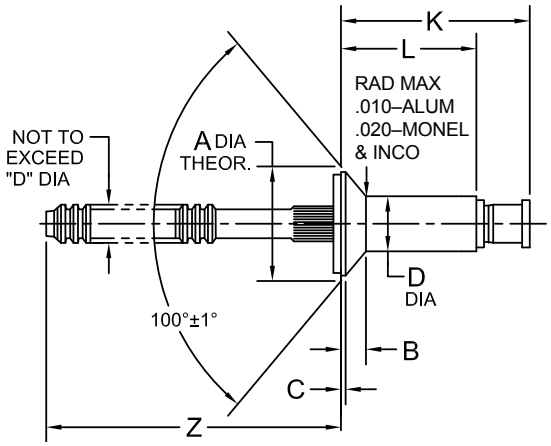

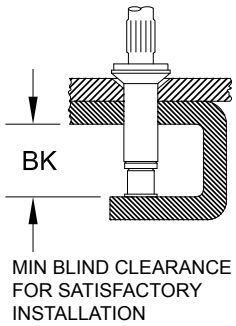

Head markings visible after installation.

Dia. Dash No.	D +.003 -.001	A① ±.004	B (ref)	BK min	Z (ref)	C		Hole Limits
						Aluminum	Monel	
-4	.140	.272	.038	.390	.87	.002-.010	.005-.015	.143-.146
-5	.173	.314	.041	.395	.94	.002-.012	.005-.015	.176-.180
-6	.201	.350	.048	.410	.94	.002-.012	.005-.015	.205-.209

Grip Limits 1/16		-4(1/8") Diameter			-5(5/32") Diameter			-6(3/16") Diameter		
Min.	Max.	Dash No.	+.000 L -.030	K max	Dash no.	+.000 L -.030	K max	Dash No.	+.000 L -.030	K max
.063	.125	4-02	.238	.45	5-02	.266	.47	6-02	.265	.48
.126	.187	4-03	.301	.52	5-03	.309	.53	6-03	.328	.55
.188	.250	4-04	.363	.58	5-04	.371	.60	6-04	.390	.62
.251	.312	4-05	.426	.65	5-05	.434	.66	6-05	.453	.68
.313	.375	4-06	.488	.71	5-06	.496	.72	6-06	.515	.74

Rivet Number	Material ③			Finish		
	Sleeve	Stem	Lock Collar	Sleeve	Stem	Lock Collar
CR3246	5056 ALUM. ALLOY QQ-A-430	8740 ALLOY STEEL AMS 6322	A-286 CRES AMS 5731	CHEM FILM MIL-DTL-5541 PLAIN COLOR	CAD PLATE QQ-P-416 TYPE II CL. 2	PASSIVATE AMS 2700
CR3556	MONEL QQ-N-281	15-7 PH CRES AMS 5657	A-286 CRES AMS 5731	NONE	NONE	
CR3556P	MONEL QQ-N-281	15-7 PH CRES AMS 5657	A-286 CRES AMS 5731	ALUM. COAT MIL-DTL-83488	NONE	

NOTE: ① Head diameters are to theoretical projection.
2. Do not clean or degrease prior to installation —lubricant must not be removed.
③ Chemical composition only.
④ Silver colored driving anvil identifies oversize rivets.

DRILLING

Use a clean, sharp, properly ground drill. Improperly ground drills will create oval or oversize holes. Center the drill in the chuck so that the drill will run true. A "wobble" in the drill will create an oversize hole. Hold the drill perpendicular to the surface being drilled. Do not force the drill through the material.

Do not chamfer or otherwise remove the sharp edge of the blind side of the joint!

To ensure proper hole alignment and to prevent burrs and chips from lodging between the sheets, the materials to be riveted should be clamped tightly together. Hole filling hollow pull thru or tack rivets may be used in conjunction with spring-loaded clamps to prevent material creep and hole misalignment during the drilling operation.

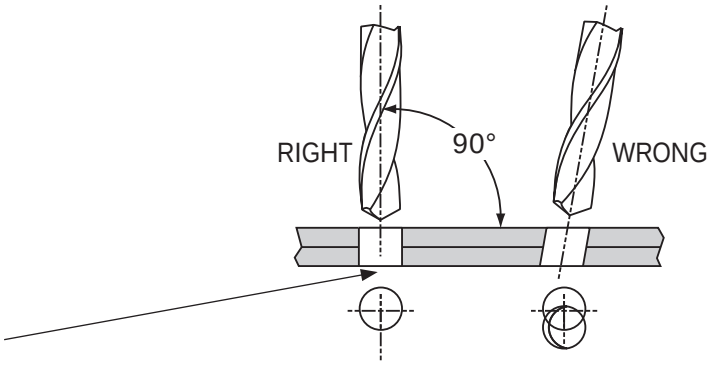

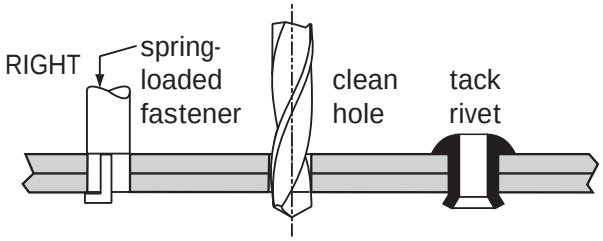

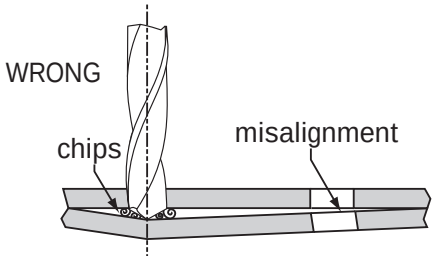

DRILL SIZES

Drill sizes shown in table below are those which normally produce holes within the specified limits. To assure drilling accuracy, holes should be checked with a go/no-go gage as shown on page 6.

Nominal CherryMAX			
Rivet Diameter	Drill Size	Hole Size	
		Min.	Max
-4 (1/8") 0	#30	.129	.132
-5 (5/32")	#20	.160	.164
-6 (3/16")	#10	.192	.196
-8 (1/4")0	F	.256	.261

Oversize CherryMAX			
Rivet Diameter	Drill Size	Hole Size	
		Min.	Max
-4 (1/8")0	#27	.143	.146
-5 (5/32")	#16	.176	.180
-6 (3/16")	#5	.205	.209
-8 (1/4")0	I	.271	.275

CHERRYMAX® RIVET

COUNTERSINKING & INSTALLATION

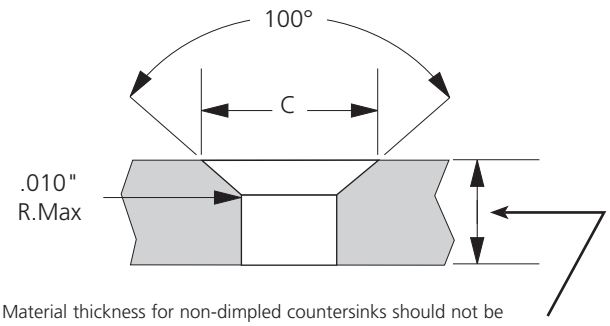

Material thickness for non-dimpled countersinks should not be less than rivet head height ('B' dimension) plus .010". See table for 'B' dimensions.

Accurate countersinking is of primary importance to the structural integrity of a flush riveted joint. Standard countersinking procedures as used with solid rivets are also applicable to CherryMAX rivets. The following points, however, should be noted:

The countersink pilot should be no more than .001" smaller than the hole diameter. A greatly undersized pilot will produce a countersink which is not concentric with the hole, creating a"cocked" rivet head condition.

Rivet Diameter	MS20426 100° Head		NAS1097 100° Head		Unisink 100° Head		120° Head	
	C MIN.	C MAX.	C MIN.	C MAX.	C MIN.	C MAX.	C MIN.	C MAX.
-4 (1/8")0	.222	.228	.189	.195	.167	.173	.269	.275
-5 (5/32")	.283	.289	.240	.246	.210	.216	.311	.317
-6 (3/16")	.350	.356	.296	.302	.252	.258	.347	.353
-8 (1/4")0	.473	.479	.389	.395	—	—	—	—

COMPARISON CHART OF RIVET HEADS "B" FOR CHERRYMAX FLUSH HEAD RIVETS

B (Head Depth) Reference					
Rivet Diameter	CR3212 100° Nominal	CR3214 100° NAS 1097	CR3242 100° Oversize	CR3245 100° Oversize Unisink	CR3246 120° Oversize
-4 (1/8")0	.041	.028	.035	.011	.038
-5 (5/32")	.054	.037	.047	.015	.041
-6 (3/16")	.069	.046	.063	.023	.048
-8 (1/4")0	.095	.060	.086	—	—

PLACING THE RIVET IN THE HOLE

The holes in the sheets to be fastened must be of correct size and aligned properly. Do not force the rivet into the hole! To aid in achieving proper clamp-up of the sheets, use tack rivets and/or spring loaded clamps.

PLACING THE PULLING HEAD ON THE RIVET STEM

Hold the riveter and pulling head in line with the axis of the rivet as shown in the illustration. Press firmly against the head of the rivet to minimize head gapping and sheet gap. Apply a firm, steady pressure and pull the riveter trigger to begin installation sequence. The installation cycle will help clamp the sheets together, seat the rivet head, and break the stem flush with the head of the rivet. After the stem breaks, release the trigger. The pin-tail portion of the stem will be ejected back thru the riveter head. A stem catcher bag may be obtained to collect the pin-tails, Part Number 670A20. See page 25.

WARNING: Operating the riveter with a damaged or missing stem deflector, or using the deflector as a handle, **may** result in severe personal injury.

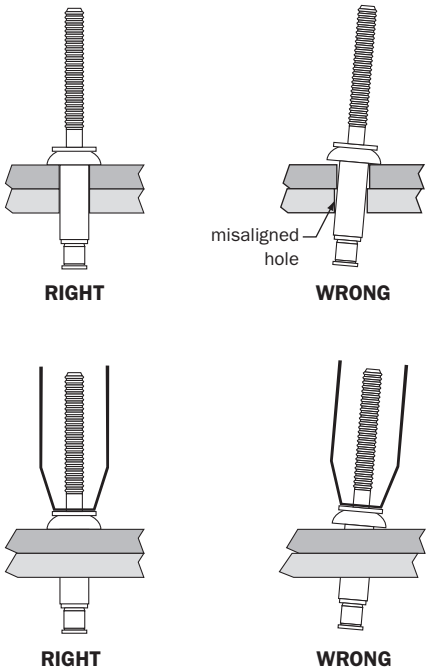

RIVET INSPECTION

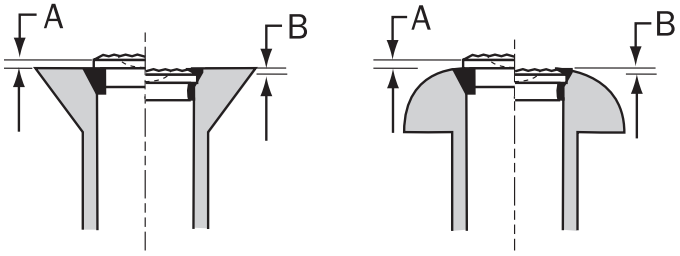

Shown is typical installed fastener flushness acceptance criteria. Locking element shall be flush with top surface of rivet head within ±.005. Slight element flash permissible .010 maximum from top of rivet head.

Rivet Diameter	A Max.	B Max.
-4 (1/8")0	.010″	.015″
-5 (5/32")	.010″	.020″
-6 (3/16")	.010″	.020″
-8 (1/4")0	.015″	.025″

ACCEPTABLE BLIND HEAD FORMATIONS

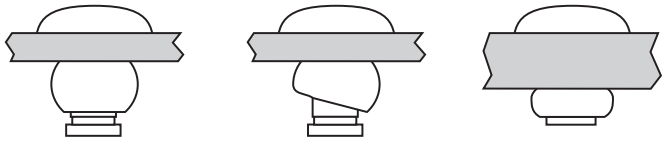

Typical Min. Grip | **Irregular Formation Min. Grip** | **Typical Max. Grip**

TOOLING SELECTION CHART

The tooling and pulling head combinations shown in the chart below will install the diameter rivets indicated by the shaded areas, in all grip lengths, and materials, .

For more information regarding installation tooling combinations, please contact Cherry Aerospace Technical Service, 714-850-6045.

Cherry Riveter Model	Pulling Head Number	All Grip Lengths, Head Styles & Materials Except As Noted							
		Nominal Diameter				Oversize Diameter			
		-4	-5	-6	-8	-4	-5	-6	-8
G27	INCLUDED	■				■			
G83	H701B-456 ③	■	■	■		■	■	■	
	H753A-456 ③	■	■	■		■	■	■	
	H781-456 ③	■	■	■		■	■	■	
	H782 ③	■	■	■		■	■	■	
	H84A-8				■				■
	H827-8 ②				■				■
	H828-8 ②				■				■
G84	H84A-8				■				■
	H827-8 ②				■				■
	H828-8 ②				■				■
	H701B-456 ③	■	■	■		■	■	■	
	H753A-456 ③	■	■	■		■	■	■	
	H781-456 ③	■	■	■		■	■	■	
	H782 ③	■	■	■		■	■	■	
G686B-S	H680B200A	■	■	■		■	■	■	
G689	H680B200A	■	■	■		■	■	■	
	H680B208				■				■
G700	H680B200A	■	■			■			
G747	H701B-456	■	■	■		■	■	■	
	H753A-456	■	■	■		■	■	■	
	H781-456	■	■	■		■	■	■	
	H782	■	■	■		■	■	■	
G746A ①	H701B-456	■	■	■		■	■	■	
	H753A-456	■	■	■		■	■	■	
	H781-456	■	■	■		■	■	■	
	H782	■	■	■		■	■	■	
G704B G704B-40SH G704B-SR	H701B-456	■	■	■		■	■	■	
	H753A-456	■	■	■		■	■	■	
	H781-456	■	■	■		■	■	■	
	H782	■	■	■		■	■	■	
G744④	H744A-8				■				■
	H827-8				■				■
	H828-8				■				■
	H846A-465	■	■	■		■	■	■	
G750A	INCLUDED	■	■	■		■	■	■	
	H750A-8				■				■
G784	H680B200A	■	■	■		■	■	■	

① Will not install Monel or Inconel -6 dia. fasteners
② Requires use of 744-200 adapter
③ Requires use of 744-300 adapter
④ Non standard tool

HAND RIVETERS AND KITS

To obtain optimum advantage of CherryMAX® fasteners, it is recommended that CherryMAX® tooling be selected to install those fasteners.

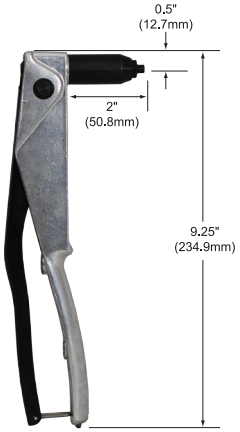

G27

National Stock Number 5120-01-393-1538

The G27 is a light-weight (13 oz) hand tool for use in low production applications such as repair, maintenance or prototype work. The pulling head is an integral part of this riveter.

G800 HAND RIVETER

National Stock Number 5120-01-432-9361

The G800 hydraulic riveting tool provides the versatility of pneumatic-hydraulic riveter with a lightweight, high pull strength ratio not found in other hand riveters. A proprietary, 2-stage hydraulic power cylinder eases pulling of the handle, eliminating the strain normally endured to install a high-strength fastener.

The G800 hand riveter can install a variety of blind fastener styles, diameters, head configurations, and material combinations. The G800 with the standard pulling head can install CherryMAX®and SST®blind rivets in -4, -5, -6, diameters, and -05, -06 diameter Maxibolt™ blind bolts or threaded inserts by simply changing the pulling head. The straight pulling head is provided with the tool.

G800CMR HAND RIVETER TOOL KIT

NSN 5120-01-583-1154

The G800CMR hydraulic riveter tool kit includes the G800 with a straight pulling head, adapter assembly, a right angle pulling head, an offset pulling head and a sturdy plastic carrying case.

1 Ea. G800 Hand Riveter (Includes Pulling Head)
1 Ea. H782 Offset Pulling Head
1 Ea. H753A-456 Right Angle Pulling Head
1 Ea. H782Tool Sheet
1 Ea. H753A-456 Tool Sheet
1 Ea. TLC816 CherryMAX Process Manual
1 Ea. MaxiBolt Reference Card TLC872
1 Ea. P1340 Tool Box
1 Ea. TLC865 CherryMAX Reference Card

POWER RIVETERS

NOTE: Pulling Heads for the tools described below must be ordered separately. They are listed in the Tool Selection Chart on page 19.

G747

National Stock Number 5130-01-044-7206
Service Kit Number G747KS

The G747 weighs 3.5 lbs. and can be operated in any position. It has a rivet setting stroke of .437", and a pulling capacity of 2100 lbs. on 90 psi air pressure at the inlet. The G747 consumes approximately .09 SCF/cycle of air and its maximum noise level under load does not exceed 85 dB(A).

G704B

National Stock Number 5130-01-393-1584
Military Part Number M85188T2
Service Kit Number G704KS

The G704B weighs 4.25 lbs. and can be operated in any position. It has a rivet setting stroke of .510" and a pulling capacity of 3100 lbs. on 90 psi air pressure at the inlet. Normal operating air pressure is 90-110 psi at the inlet. The G704B consumes approximately .16 SCF/cycle of air and its maximum noise level under load does not exceed 85 dB(A).

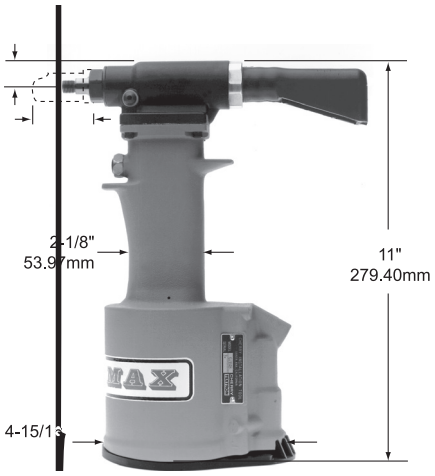

G83

National Stock Number 5130-01-435-3507
Service Kit Number G83KS

The G83 weighs 4.9 lbs. and can be operated in any position. It has a rivet setting stroke of .437" and a pulling capacity of 3750 lbs. on 90 psi air pressure at the inlet. Normal operating air pressure is 90-110 psi at the inlet. The G83 consumes approximately .16 CFM/cycle of air and its maximum noise level under load does not exceed 85 dB(A).

Warning: Operating these tools with a damaged or missing stem deflector, or using deflector as a handle, may result in severe personal injury.

SPLIT POWER RIVETERS

Pulling heads must be ordered separately. They are listed, along with the riveter's capacity (same as the G704B), in the tool selection chart on page 19.

G704B-SR

G704B-SR National Stock Number 5130-01-237-0488
Service Kit Number G704KS

The G704B-SR Split Riveter is designed specifically for the installation of CherryMAX rivets in extremely limited access applications. It transmits power from the power unit through three feet of flexible hose to a small, lightweight head. By utilizing the appropriate pulling head, design problems and operator fatigue can be greatly reduced.

The riveters have a rivet setting stroke of .510" and a pulling capacity of 3100 lbs. on 90 psi air pressure at the air inlet. Normal operating air pressure range is 90–110 psi at the inlet. The maximum noise level under load does not exceed 85dB(A).

G704B-40SH

G704B-40SH National Stock Number 5130-01-374-1335
Service Kit Number G704B-40SR/40SHKS

The G704B-40SH is designed specifically for the easiest and most efficient installation of CherryMAX rivets. In using these "split" tools, the power unit rests on the floor and transmits its power through 8 feet of hose to a lightweight pistol-grip handle. This facilitates rivet installation in many limited access areas and also greatly reduces operator fatigue.

The G704B-40SH riveter operates on 90–110 psi of air pressure at the air inlet.

G704B-40SH .510" stroke 3100 lbs. pull

PULLING HEADS

The pulling heads shown below are not furnished with riveters and must be ordered separately. When selecting the proper pullng head refer to the tool selection chart on page 19 for the appropriate riveter/pulling head combination.

FOR INSTALLING 1/8, 5/32 AND 3/16" NOMINAL & OVERSIZE CHERRYMAX RIVETS

H701B-456 STRAIGHT
NSN 5130-01-393-2927
Military Part Number M85188S1

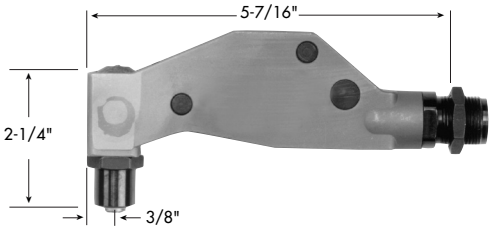

H753A-456 RIGHT ANGLE
NSN 5130-01-393-2926
Military Part Number M85188S2

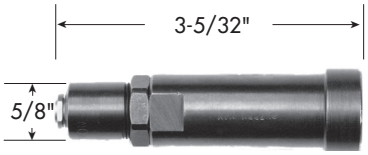

H680B200A STRAIGHT
NSN 5130-01-044-7198

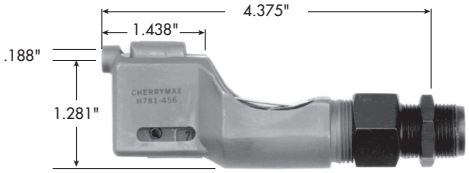

H781-456 OFFSET
NSN 5130-01-393-2925
Military Part Number M85188S3

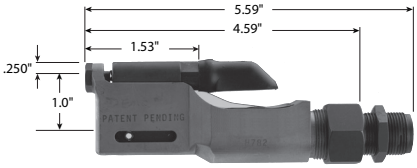

H782 OFFSET

FOR INSTALLING 1/4" NOMINAL AND OVERSIZE CHERRYMAX RIVETS

H744A-8 STRAIGHT

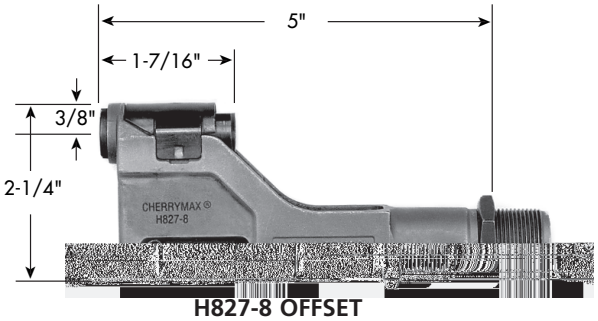

H827-8 OFFSET

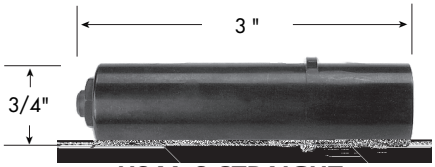

H84A-8 STRAIGHT

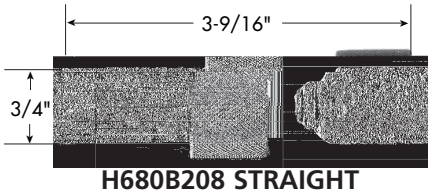

H680B208 STRAIGHT

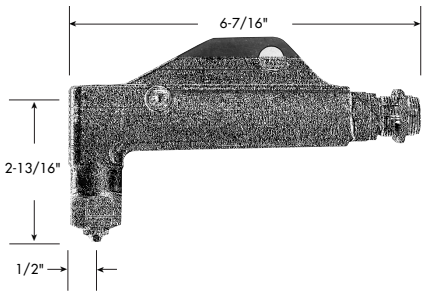

H828-8 RIGHT ANGLE

EXTENSIONS

Combinations of these extensions may be used to reach many restricted installation areas by increasing the overall length of the pulling head.

704A12-2	(2")	NSN 5130-01-145-0206
704A12-4	(4")	NSN 5130-01-145-0207
704A12-6	(6")	NSN 5130-01-145-0208
704A12-12	(12")	NSN 5130-01-178-0331

These extensions will fit directly on to the G747, G704B and G746A CherryMAX Riveters and will accept any of the pulling heads listed for those riveters in the Tool Selection Chart on page 19

753B21 (1-1/8") (Not Shown)

This extension increases the overall length of the H753A-456 right angle pulling head nosepiece to approximately 2-3/16", enabling it to reach into more restricted areas.

ADAPTERS

These adapters fit the G747, G704B and G746A CherryMAX riveters to accept pulling heads designed for the installation of MS-type blind rivets in shorter grip lengths.

704A6 NSN 5130-01-145-6189
Permits the use of H9040 snap-on type pulling head.

704A9 NSN 5130-01-134-8231
Permits the use of H9015 screw-on type pulling head.

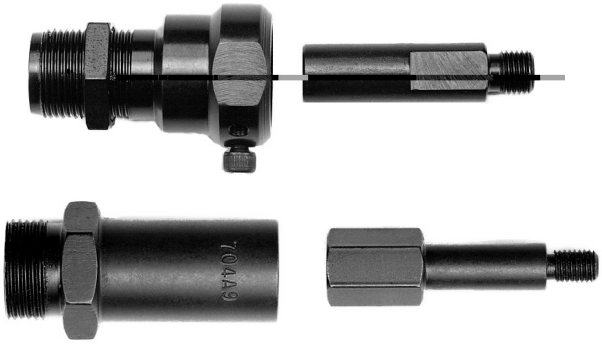

ADAPTERS

These adapters permit various Cherry riveters to accept pulling heads for the installation of CherryMAX rivets that the riveters were not originally intended to pull.

680B205 NSN 5130-01-175-4015
Permits the G686B-S, G689, G700 and G784 to accept the H753A-456 and H781-456 pulling heads for installing 1/8, 5/32 and 3/16" CherryMAX rivets.

744-300
Permits the G83 and G84 riveters to accept the H701B-456, H753A-456 and H781-456 pulling heads for installing 1/8, 5/32 and 3/16" CherryMAX rivets.

744-200
Permits the G83 and G84 riveters to accept the H827-8 (offset), and H828-8 (right angle) pulling heads for installing 1/4" diameter CherryMAX rivets

ACCESSORIES

701B32 MAGNETIC DRIVING ANVIL CATCHER

The 701B32 magnetic driving anvil catcher provides a method to catch and hold the driving anvils as they fall away after rivet installation. This anvil catcher slips onto the nose of the pulling head without any need for permanent attachment.

670A20 STEM CATCHER BAG NSN 5130-01-154-1141

The 670A20 stem catcher bag is a convenient accessory which helps eliminate litter from the shop floor. This bag snaps over the stem deflector of the G701A, G704B, G746A, G747, G83 and G84 CherryMAX riveters to catch the spent stems as they are ejected from the rear of the riveter head.

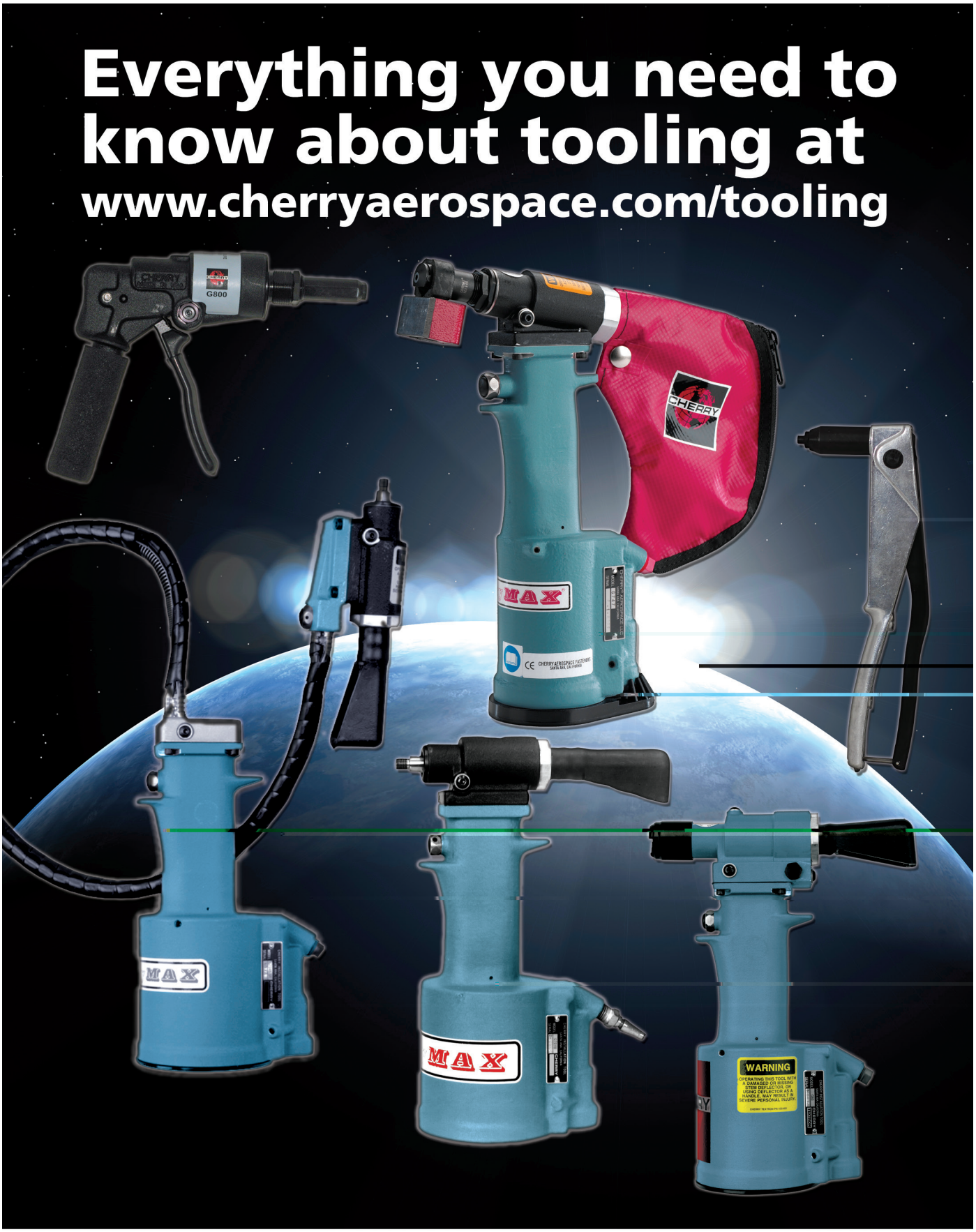
Everything you need to know about tooling at
www.cherryaerospace.com/tooling
G800
MAX
MAX
MAX
WARNING

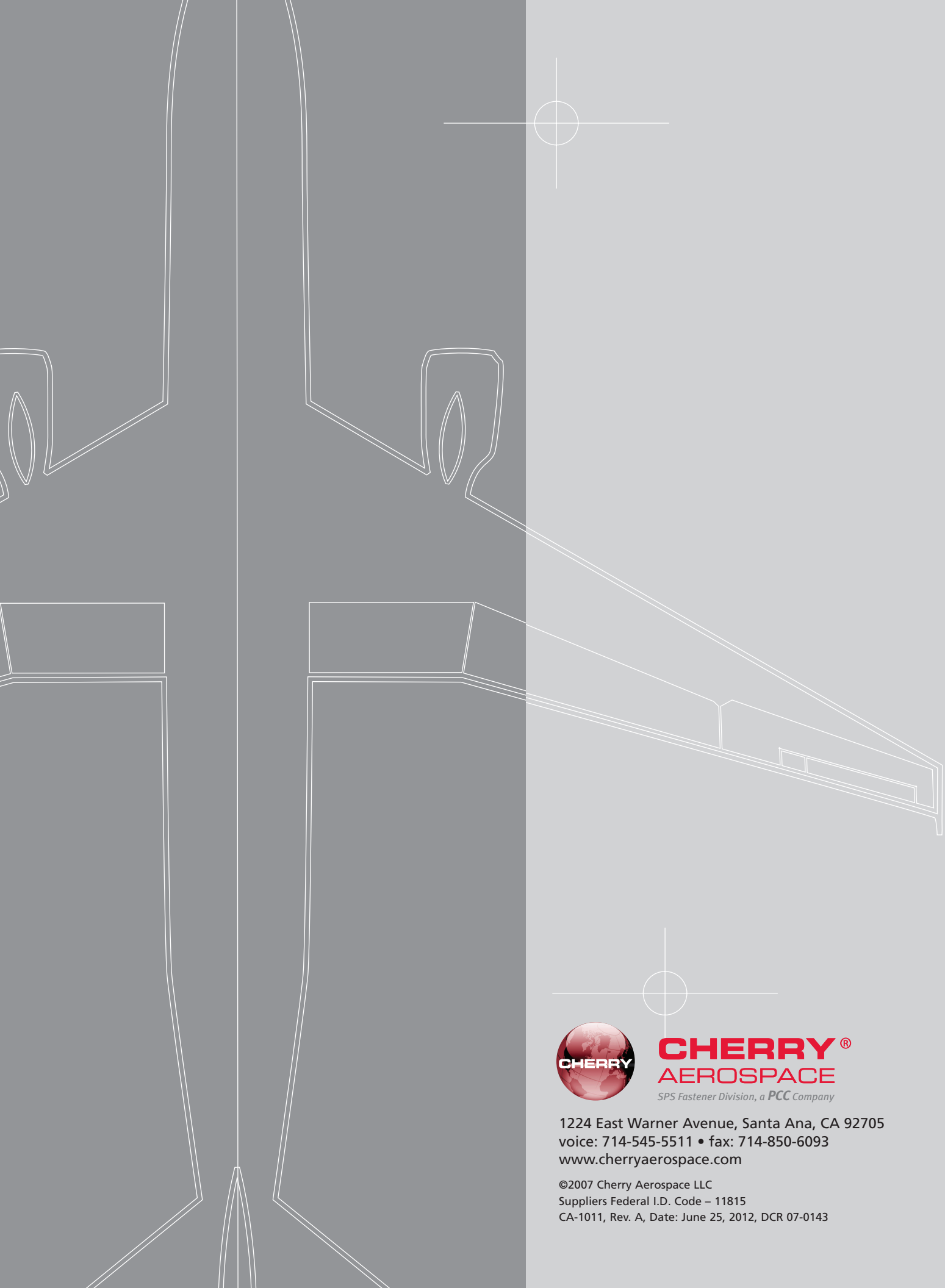

CHERRY®
AEROSPACE
SPS Fastener Division, a PCC Company

1224 East Warner Avenue, Santa Ana, CA 92705
voice: 714-545-5511 • fax: 714-850-6093
www.cherryaerospace.com

©2007 Cherry Aerospace LLC
Suppliers Federal I.D. Code – 11815
CA-1011, Rev. A, Date: June 25, 2012, DCR 07-0143